NAJ Guidance Note

GEMSTONE DESCRIPTIONS

Version 3. September 2026.

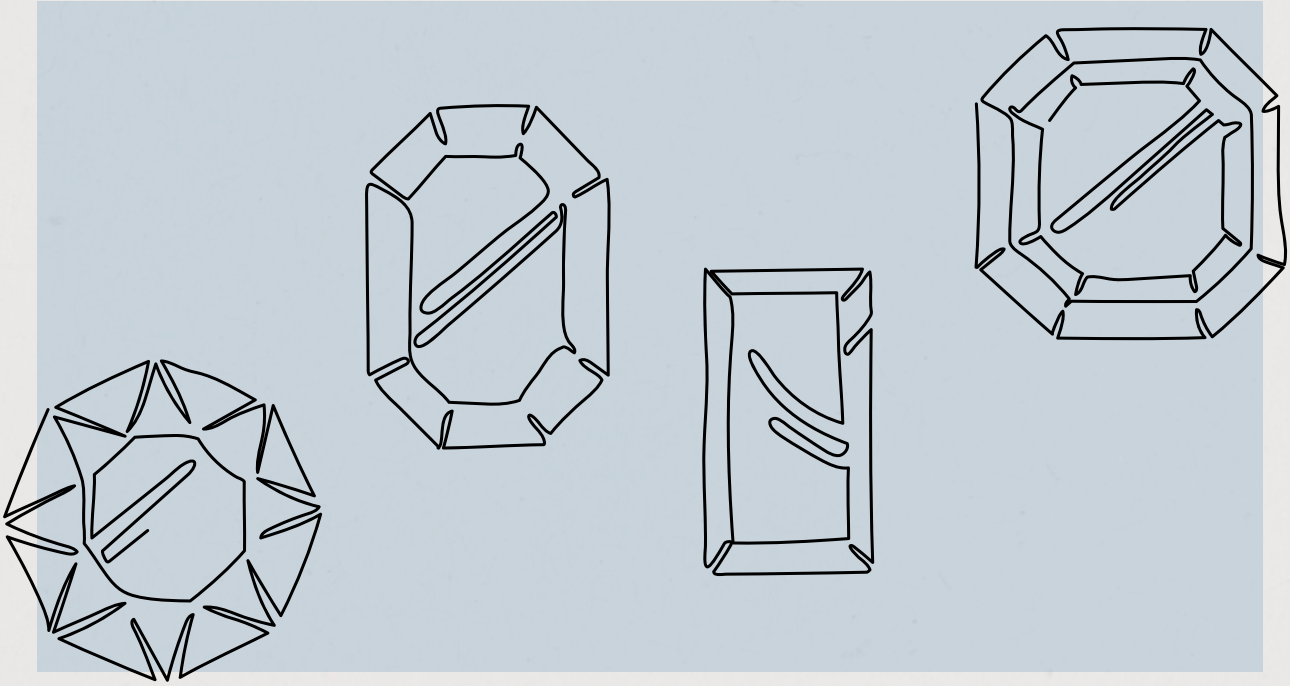

Introduction

This guidance note is intended to assist all levels of the jewellery industry in understanding their obligations towards customers in describing diamonds and gemstones.

It is a simplified guide built on the internationally accepted standard - The CIBJO Gemstone Blue Book 20-12-22-Official-Gemstone-Book.pdf (cibjo.org). NAJ Members are encouraged to familiarise themselves with The CIBJO Blue Books to better understand the rules.

The Association considers it unacceptable to misrepresent or withhold information that an average consumer might reasonably expect to receive as part of a purchase decision. This is the minimum legal expectation set out in The Digital Markets, Competition and Consumers Act 2024 (DMCC Act), which replaced the Consumer Protection from Unfair Trading Regulations 2008 (CPRs) from 6 April 2025. The DMCC Act continues to require traders to act in a way that enables the average consumer to make free and informed purchasing decisions. This includes providing clear, accurate and upfront information about gemstones so that consumers can understand the nature and characteristics of what they are buying.

Consumers gain confidence from openly transparent businesses. Even if a customer has not asked about the specifics of a gemstone, this information should be provided. This disclosure may include information relating to the size, weight, nature, quality, modification, durability, value or rarity of a gemstone.

NAJ Guidance Note: Gemstone Descriptions

The National Association of Jewellers

Classification of Gemstones

The jewellery industry recognises two categories of material: natural materials and artificial products.

Natural Material

Completely formed by nature, without human intervention during its formation or subsequent treatment processes after mining, such as cutting, polishing and finishing.

Gemstones

Natural inorganic or organic materials are used in jewellery or objets d'art due to a combination of properties that provide them with beauty, rarity, and relative durability.

Gemstones encompass:

- Minerals; e.g. aquamarine, diamond, emerald, garnet, opal, sapphire.
- Natural glasses; e.g. obsidian.
- Rocks; e.g. lapis lazuli, opal with matrix and turquoise with azurite and malachite.
- Organic gem materials; e.g. amber and jet.
- Biogenic gem materials; e.g. pearl, coral and tortoise shell.

Treated Gemstones

Treated gemstones encompass all gemstones/materials that have been subjected to a treatment.

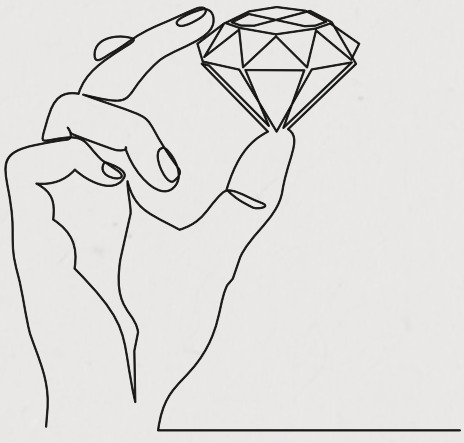

Artificial Products

Products which include a variety of materials that are partially or completely made by man.

Artificial Products with gemstone components

These are composite stones, examples of which include garnet topped doublets, opal on onyx doublets, soudè stones, which are beryl cemented with coloured cement, natural sapphire on synthetic ruby doublets, as well as ruby-glass composites, pressed amber and emerald on emerald doublets. These are all referred to as artificial products.

Artificially Crystallised Products with no known natural counterpart

Artificially crystallised products with no known natural counterpart include, e.g. yttrium aluminium garnet (YAG) and gadolinium gallium garnet (GGG).

Artificial Uncrystallised Products

Artificial uncrystallised products include man-made glass lead glass, plastic and products of various compositions, such as pressed materials (e.g. pressed turquoise) that are used to imitate the appearance of gemstones and organic gem materials.

HPHT

This stands for High Pressure, High Temperature and is one of the primary methods used to grow synthetic diamonds in a laboratory. It can also be used to treat natural and synthetic diamonds to enhance their colour.

Synthetic stones

Synthetic stones encompass materials defined as man-made/artificial gemstones that are chemically and structurally identical to a natural gemstone rather than just a similar appearance. Commercially available examples include synthetic ruby, synthetic sapphire, synthetic emerald, synthetic amethyst and synthetic diamond (often referred to as Laboratory Grown Diamond).

NAJ Guidance Note: Gemstone Descriptions

The National Association of Jewellers

Why Treatments?

It is common for natural products to undergo processes to enhance their beauty and durability. Wood is usually impregnated and varnished, leather and fabrics are commonly dyed and coated, and gemstones are no different. These things help us to get the most value and enjoyment out of raw natural materials, give more choices, and allow us to use more of our precious natural resources.

Coloured gemstones are subjected to a growing range of treatments designed to enhance their value. For instance, heat treatment has been used to improve the colours in rubies and sapphires for around two thousand years and is a routine treatment on most rubies and sapphires in the market. Modern treatments can also diffuse chemical elements into some gemstones at high heat to radically change their colour. Irradiation is commonly used to enhance the colour of gemstones such as topaz, smoky quartz and fancy diamonds. Generally, these treatments are permanent and stable, which means they will not degrade or alter over time or with general wear.

The appearance of surface cavities, fractures, fissures and laser drill holes in gemstones can be minimised by filling them with glass, glass-like substances, oils and resins, and some porous or brittle gemstones can be impregnated with other materials. Such treatments can sometimes give added durability to the stone as well as improve the appearance. For instance, emeralds are routinely treated with oils and resins to provide a clearer appearance to the stone and are often referred to as "oiled" or "filled". Many gemstones can also be dyed or coated to change or improve the colour. Jadeite and topaz are examples of such gemstones. If a gemstone has been identified as having been treated in any of these ways, then care must be taken in the maintenance, repair, cleaning, and often wearing or storing of the jewellery that contains it. Extremes of heat, steam and ultrasonic cleaning are not recommended; detergents, other chemicals, and potentially everyday wear may affect the treatment and, therefore, the gemstone's appearance.

A skilled and trained gemmologist will be able to spot the features of many common and commercial treatments, but some will need testing in a gemmological laboratory with advanced equipment. A good gemstone laboratory will look for and test for these treatments, where they can detect, and include treatment information on the gemstone report. Some treatments can be controversial as they enhance the beauty of materials that, without treatment, may have been unsuitable for jewellery. It is also challenging to find untreated natural gemstones in some routinely treated categories, particularly ruby, sapphire, emerald, and other rare and valuable gems; therefore, untreated examples can attract a significant premium.

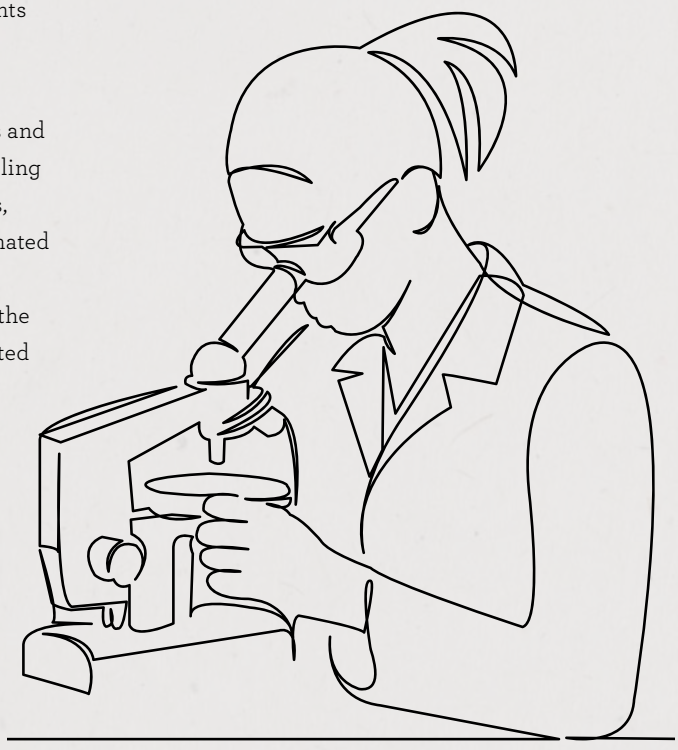

NAJ Guidance Note: Gemstone Descriptions

The National Association of Jewellers

Disclosure

Disclosure means giving your customers the material information they need to make an informed decision. You need to do this even if they do not ask, regardless of the treatment's impact on the gemstone's value. However, it is particularly important if a treated example would be significantly lower in value than an untreated example of the same appearance.

Gemstones that have undergone treatments are classified into two categories of disclosure: **general** and **specific**.

General disclosure, sometimes referred to as verbal disclosure, means that you are required to tell your customer about any treatment during conversation, whether in a face-to-face transaction or as part of the item details if online. This must be in clear and understandable language prior to the completion of a sale. In addition, any commercial documents, e.g. quotations, invoices and receipts, should include information about the type of treatment used.

Examples of disclaimers in your terms and conditions could be:

The majority of rubies and sapphires sold globally are heat-treated to enhance their appearance. Unless otherwise stated, it is assumed all rubies and sapphires will have undergone this treatment. This treatment is stable and permanent.

Specific disclosure means that you **MUST** use the word treated or the treatment type before the name of the stone in every description and any documentation about the item, as well as a verbal or online explanation of the treatment prior to sale.

An example of a gemstone requiring specific disclosure is a lead glass-filled ruby, which has to be described as glass-filled ruby, treated ruby or composite ruby, all words being of the same prominence. The treatment type shall be conspicuously written on all commercial documents. The treatment type cannot be abbreviated or have an asterisk next to it referring to a footnote. For any gemstone with a potentially unstable treatment, the customer should be given the correct care advice. For instance, glass-filled corundum is unstable to elevated temperatures, and to certain chemical agents, special care should be taken when cleaning or repairing jewellery items set with such stones.



NAJ Guidance Note: Gemstone Descriptions

The National Association of Jewellers

Dos and Don'ts

You should:

- Ask your supplier about treatments and the origin of gems, and make sure this information is on your invoices.
- Ensure all items are labelled correctly as per CIBJO guidelines.
- Ensure all sales staff are educated in the use of proper gemstone names and terminology.
- Always clearly disclose the nature of the product itself and any man-made treatments prior to and at the time of sale.
- Always alert the customer to the stability or durability issues of gemstones, particularly when treated. i.e., how will it stand up to repair, cleaning or use?
- Where the words "treated" or "synthetic" are used in writing, they must be of equal prominence as the word that describes the gemstone.
- Ensure that advertising and marketing, whether in print or online, follow the guidance set in this CoP. If you are unsure in any way, please contact compliance@naj.co.uk for advice.
- With synthetic diamonds, use only the precursors "synthetic", "laboratory grown" or "laboratory created". See our guidance on Diamond Terminology for more details.
- With pearls, the precursor "Cultured" must be used for any pearl that is not a natural pearl. (This is MOST pearls on the market). The term cultured may not be used for any inorganic gem material, e.g. diamonds or coloured stones.

You should NOT;

- Use ambiguous language or abbreviate or place an asterisk to declare that a stone is treated or that the stone is artificial—an example of ambiguous language; natural treated ruby.
- Do not use the terms "cultured" and "cultivated" when referring to artificial gemstones, including synthetic gemstones. Cultured and cultivated refer exclusively to organic/biogenic products.
- Do not use the adjectives "real", "genuine", "precious", "authentic" and "natural" when referring to artificial products.
- Do not wait until after a sale is closed to disclose relevant information about the gemstone.

Training

It is crucial that all sales staff receive appropriate training so they fully understand the differences in the treatment of gemstones and the importance of getting this information correct.

CIBJO Treatment codes

ASBL Assembled product
B Bleaching
C Coating
CMP Composite materials
D Dyeing
F Filling
H Heating
I Impregnation
IMIT Imitation
L Lasering
N Natural
O Oil/Resin Infusion
R Irradiation
SYN Synthetic
UD diffusion
W Waxing/Oiling

NAJ Guidance Note: Gemstone Descriptions

The National Association of Jewellers

Frequently Asked Questions

Q. How do we talk to our customers about treatments in a positive and understandable way?

A. For example, "We all need a little help sometimes; gemstones are no different. Did you know that almost all rubies and sapphires sold around the world are heated to bring out a more beautiful colour?"

In a sales situation, always present things in a positive light. In presenting an emerald ring, you could say something like, "The oil is invisible and simply helps you see the emerald", or "I can't tell if this aquamarine has been heat treated because the process replicates what happens in nature."

Q. What is the difference between treatment and enhancement?

A. There is no difference between the terms "treatment" and "enhancement." They are both used to describe any artificial process that alters the appearance, especially the colour or clarity, of any gem material.

Q. What do I need to include on the sales description, receipt and invoices? What does a correct label look like?

A. Stones requiring specific disclosure of the treatment type should be described correctly on all point-of-sale materials. See examples below:

9ct white gold ring
set with Treated Ruby
3.25ct
£200.00

18ct claw set stud
earrings
With Laboratory
Grown Diamonds
Total ct weight 1.52ct
£900.00



Useful Links and Further Reading

- Introduction to the Blue Books – CIBJO – The World Jewellery Confederation
- An Introduction to Gem Treatments (gia.edu)
- Gem Hub - Expert Gem & Diamond Knowledge | Gem-A
- NAJ secures green light from UK Trading Standards for Diamond Terminology Guideline
- Careers & Education in Jewellery (naj.co.uk)
- Digital Markets, Competition and Consumers Act 2024

NAJ Professional Standards Definition

The National Association of Jewellers

Code of Conduct

The NAJ Code of Conduct is a set of rules and standards based on honesty, integrity and professionalism that members MUST abide by. The honouring of this commitment to the Code of Conduct sets members businesses apart from others.

Code of Practice

An NAJ Code of Practice is a set of rules regarding a particular subject. Most often, these Codes of Practice are translations of existing UK law. A Code of Practice provides explanations of how to uphold the law. Members MUST follow these codes in order to remain legally compliant.

Guidance Notes

An NAJ Guidance Note is a document produced to help members better understand their obligations in various areas. Guidance Notes can be on various subjects and are not always based on a specific UK Law. Members are expected to follow these instructions as best practice, although there is no statutory requirement. Guidance notes will be considered by The NAJ Professional Technical Standards Group for elevation to a Code of Practice after a period of two years has elapsed since their publication.

Disciplinary Procedure

The NAJ Disciplinary process is a series of steps that the NAJ can take to address member behaviour that falls short of the expectations as set out in the Code of Conduct.

These documents are live documents and subject to continued review; they can all be accessed on the NAJ website here; **Codes of Practice (naj.co.uk)**

The National Association of Jewellers

NAJ Disciplinary Procedure Tree

